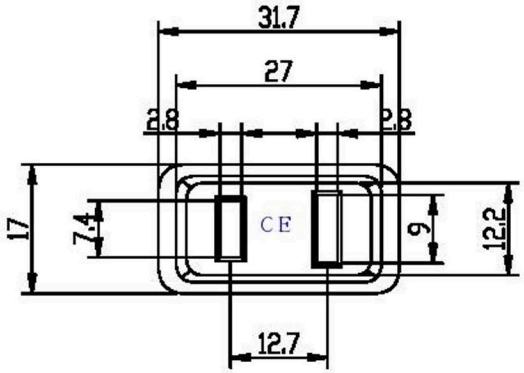


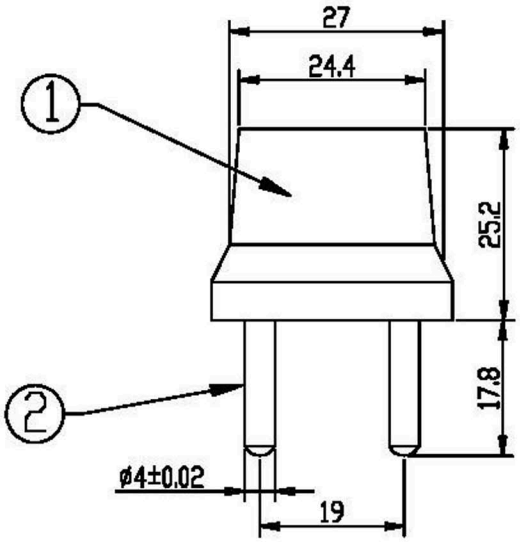


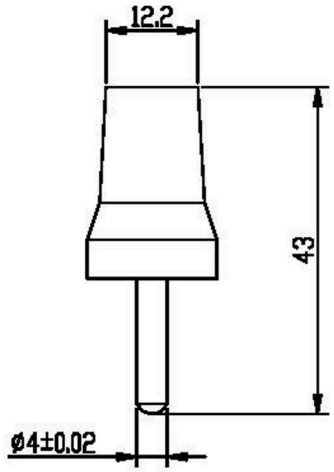


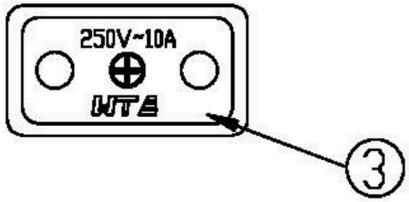


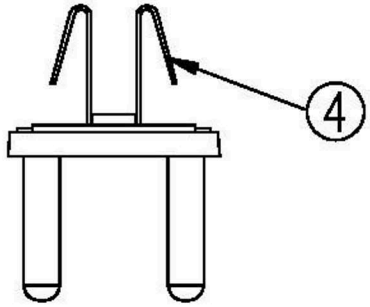


**SPECIFICATION**

**CONTACT RATING: 10A 250V~AC**

**INSULATION RESISTANCE: 500V DC for 1 min.**

**Dielectric strength: 2000V a.c. for 1 min.**

**Withstand voltage:** AC 500V 60Hz 1 minute

| NO | DESCRIPTION | MATERIAL | Q'TY |
|---|---|---|---|
| 1 | HOUSING | BAKELITE BLACK | 1 |
| 2 | PLUG | C3604ALLOY COPPER, NICKEL | 2 |
| 3 | COVER | BAKELITE BLACK | 1 |
| 4 | CONTACT | PHROSPHOR COPPER, NICKEL | 2 |

| TOLERANCES |
|---|
| 0.5MM-5MM=±0.2MM |
| 5MM-30MM=±0.4MM |
| 30MM-120MM=±0.6MM |
| 120MM-315MM=±1.0MM |
| 315MM-1000MM=±1.6MM |
| 1000MM-2000MM=±2.4MM |

| General Tolerance | 繪圖 Draw By | 設計 Designed By | 比例尺 Scale | | REF.NO. |
|---|---|---|---|---|---|
| | C.T WANG | C.T WANG | 1:1 | ULTIMAX® THE ULTIMATE COMPONENTS | |
| 版本 Version | 核準 Approved By | 核準日期 Date | 單位 UNIT | AC-7220 | |
| 3 | | 11 DEC 2012 | m/m | | |